# DATA SHEET

## Three Phase Induction Motor - Squirrel Cage

| | |
|---|---|
| Customer | : |

| | | | |
|---|---|---|---|
| Product line | : Rolled Steel NEMA Premium Efficiency Three-Phase | Product code : | 12655083 |
| | | Catalog # : | HT000404NPW01 |

| | | | |
|---|---|---|---|
| Frame | : 143/5T | Locked rotor time | : 34s (cold) 19s (hot) |
| Output | : 1 HP (0.75 kW) | Temperature rise | : 80 K |
| Poles | : 4 | Duty cycle | : Cont.(S1) |
| Frequency | : 60 Hz | Ambient temperature | : -20°C to +40°C |
| Rated voltage | : 230/460 V | Altitude | : 1000 m.a.s.l. |
| Rated current | : 2.94/1.47 A | Protection degree | : IP55 |
| L. R. Amperes | : 25.3/12.6 A | Cooling method | : IC411 - TEFC |
| LRC | : 8.6x(Code M) | Mounting | : F-1 |
| No load current | : 1.78/0.890 A | Rotation¹ | : Both (CW and CCW) |
| Rated speed | : 1765 rpm | Noise level² | : 52.0 dB(A) |
| Slip | : 1.94 % | Starting method | : Direct On Line |
| Rated torque | : 0.411 kgfm | Approx. weight³ | : 17.3 kg |
| Locked rotor torque | : 280 % | | |
| Breakdown torque | : 300 % | | |
| Insulation class | : F | | |
| Service factor | : 1.15 | | |
| Moment of inertia (J) | : 0.0052 kgm² | | |
| Design | : B | | |

| Output | 25% | 50% | 75% | 100% |
|---|---|---|---|---|
| Efficiency (%) | 81.0 | 82.5 | 84.0 | 85.5 |
| Power Factor | 0.30 | 0.52 | 0.66 | 0.75 |

| Foundation loads | |
|---|---|
| Max. traction | : 34 kgf |
| Max. compression | : 51 kgf |

| | | Drive end | Non drive end |
|---|---|---|---|
| Bearing type | : | 6205 ZZ | 6203 ZZ |
| Sealing | : | V'Ring | V'Ring |
| Lubrication interval | : | - | - |
| Lubricant amount | : | - | - |
| Lubricant type | : | Mobil Polyrex EM | |

Notes
USABLE @208V 3.25A SF 1.00 SFA 3.25A

This revision replaces and cancel the previous one, which must be eliminated.
(1) Looking the motor from the shaft end.
(2) Measured at 1m and with tolerance of +3dB(A).
(3) Approximate weight subject to changes after manufacturing process.
(4) At 100% of full load.

These are average values based on tests with sinusoidal power supply, subject to the tolerances stipulated in NEMA MG-1.

| Rev. | Changes Summary | Performed | Checked | Date |
|---|---|---|---|---|
| | | | | |

| | | | | |
|---|---|---|---|---|
| Performed by | | | | |
| Checked by | | | Page | Revision |
| Date | 13/11/2020 | | 1 / 1 | |

This document is exclusive property of WEG S/A. Reprinting is not allowed without written authorization of WEG S/A.
Subject to change without notice

No reproduction of this drawing is allowed written permission of WEG Motores

| EIXO | |
|---|---|
| PADRÃO | X |
| OPCIONAL | |
| ESPECIAL | |

Dimensões em polegada
Dimensions in inches

THIS IS AN UPDATED REVISION, THE PREVIOUS ONE MUST BE DISREGARDED.

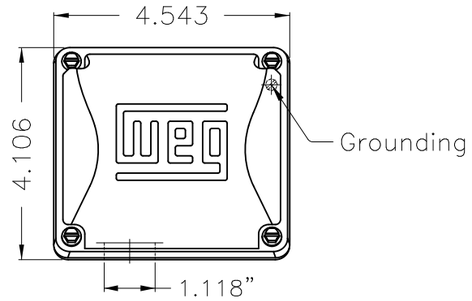


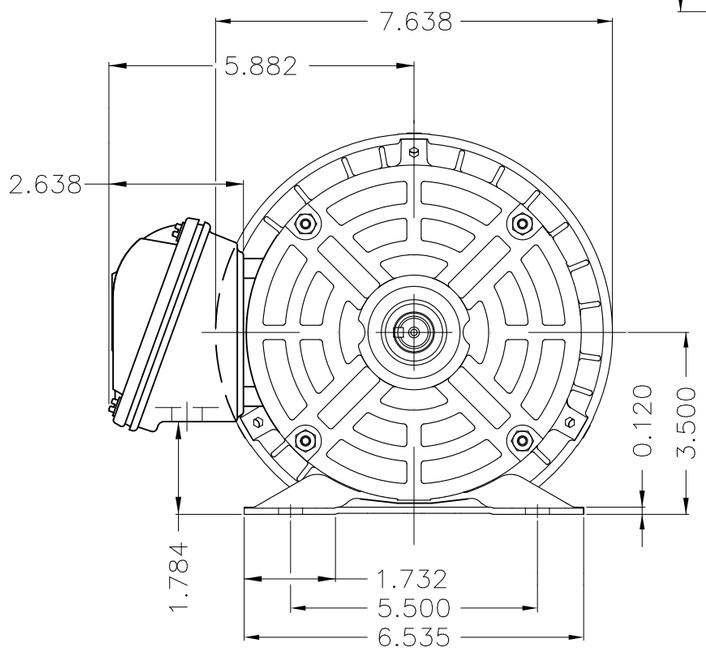


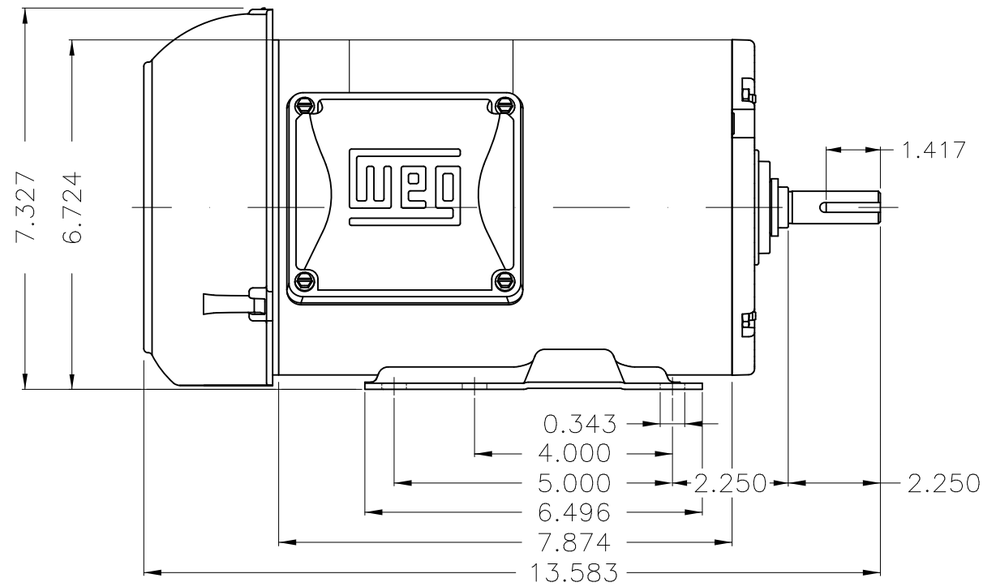


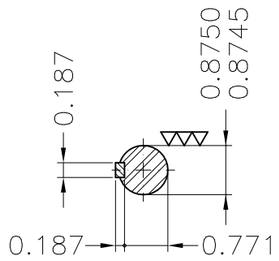


DE Shaft End

Color Munsell N 1 matte black
Painting plan 207N
Mounting F-1/B3R(D)

| ECM | LOC | SUMMARY OF MODIFICATIONS | EXECUTED | CHECKED | RELEASED | DATE | VER |
|---|---|---|---|---|---|---|---|
| | | | | | | | |
| | | | | | | | |

| | | | |
|---|---|---|---|
| EXECUTED | USERADMIN | THREE P. MOTOR CLOS ROLLED STEEL NEMA PREM | |
| CHECKED | | FRAME 143/5T IP55 TEFC | |
| RELEASED | | WEG code: 12655083 | |
| REL DT | 13.11.2020 | WMO | Jaragua do Sul | Product Engineering | SHEET 1 / 1 |

1 HP 04 Poles 60Hz

A

ZME A3

WEG's property. Forbidden reproduction without previous authorization.